Electrostatically Charged Dust Grain Interactions with Phospholipid Bi-layers

M J. Schaible[1,2] and T. M. Orlando[1,2]

[1]School of Chemistry and Biochemistry, Georgia Institute of Technology, Atlanta, Georgia [2]NASA SSERVI REVEALS Team

Contact: mjschaible@gatech.edu

Irradiation damages grains creates reactive surface sites and electrostatic charging

- Ionizing radiation impacts the surfaces of airless bodies
- Grain surfaces exposed to UV and ion irradiation charge negative due to secondary electron emission.
- Insulating silicates discharge very slowly, and grains in the space environment can maintain charge for a long time
- Dust was cited by Apollo astronauts as one of the most significant challenges to human exploration of the Moon
- Dust grains stick to suits and equipment
- Dust carried into habitable modules can come into contact with biologic tissue
- Inhalation risks are well known in Earth environments
- Electrostatically charged and irradiated regolith grains may be much more reactive than in a passivating Earth atmosphere

Project Goals:

- Study charged grains effects on biologic molecules
  - Characterize film morphology with atomic force microscopy (AFM) and secondary electron microscopy (SEM)
  - Determine surface chemical changes using x-ray photoelectron spectroscopy (XPS) and Raman microscopy
  - Investigate membrane damage florescence microscopy (FM)
- Characterize electrostatically charged grain surfaces
  - Detect discharge events using FM
  - Use SEM to identify physical effects of grain discharge
- Investigate grain discharging and surface passivation
  - Expose charged dust grains to various chemical agents (e.g. water and O_2) to study discharge dynamics
  - Measure surface reactivity with electron paramagnetic resonance (EPR)

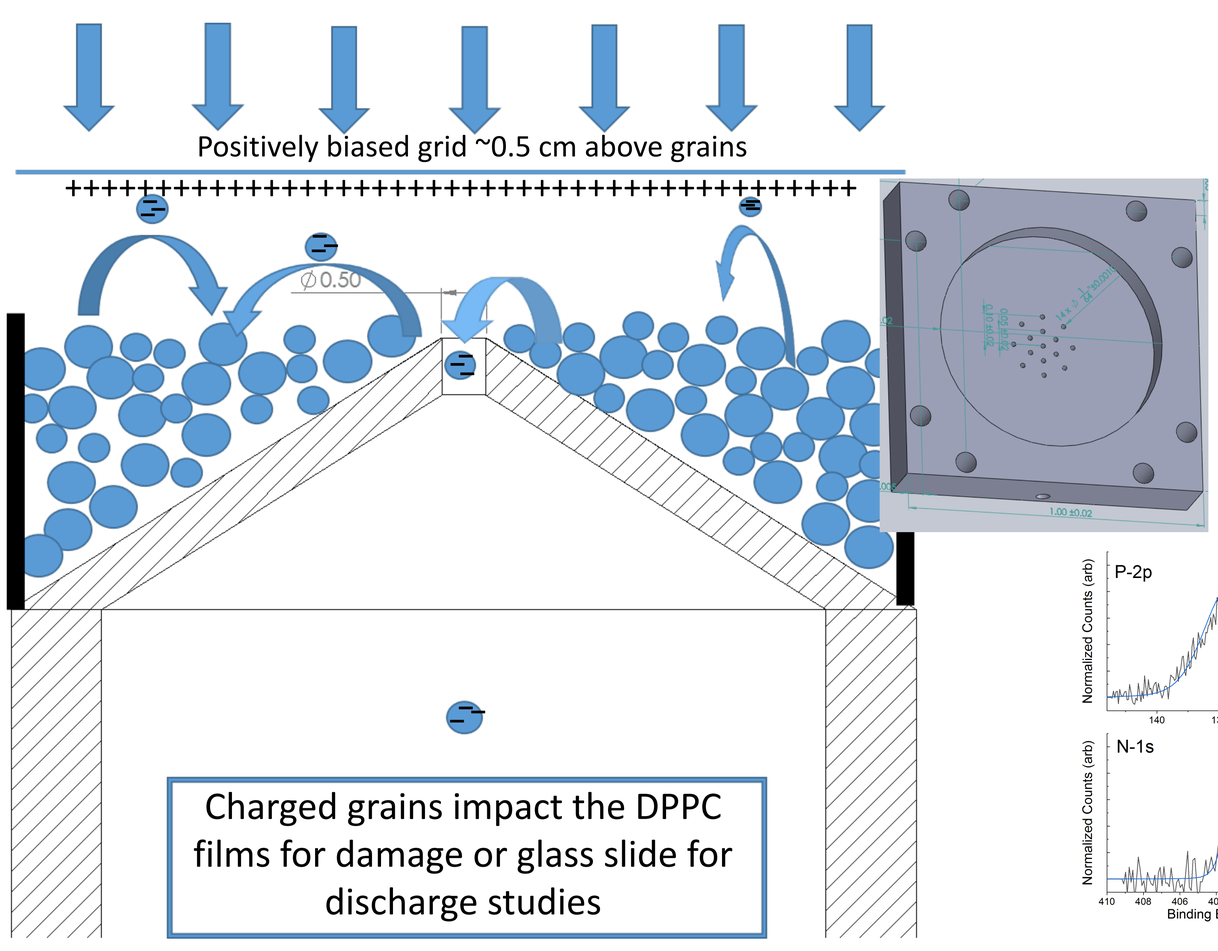

Grain Charging System

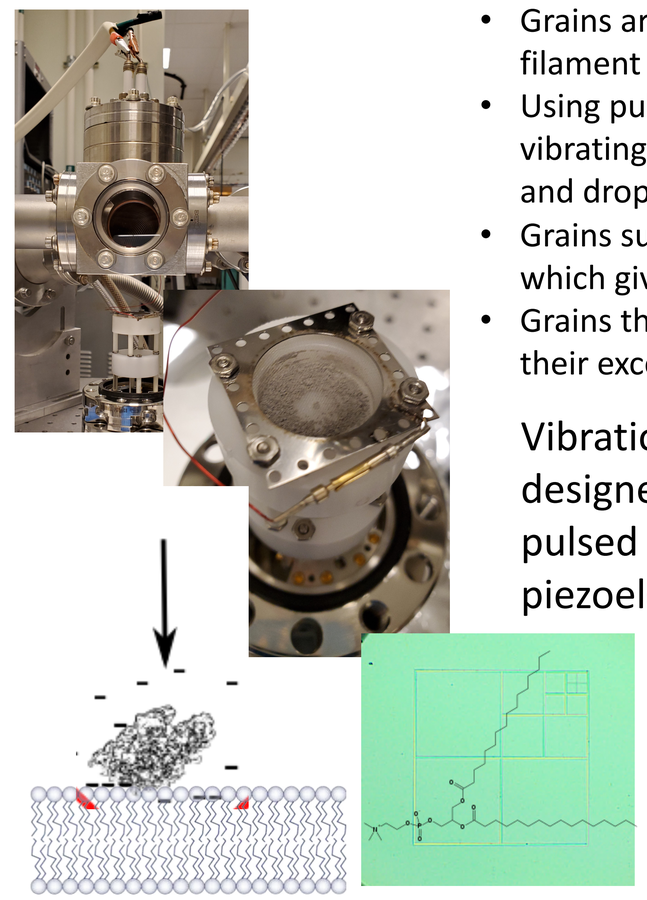

- Grains are charged through exposure to a electron filament source or triboelectric charging
- Using pulsed potentials on a wire grid, or by vibrating the sample cup, grains will be mobilized and dropped through a small aperture(s)
- Grains subsequently pass through a Faraday tube which gives the total surface charge
- Grains then land on the biomolecules, discharging their excess electrons to the films

Vibration system being designed to use either a pulsed solenoid or a piezoelectric

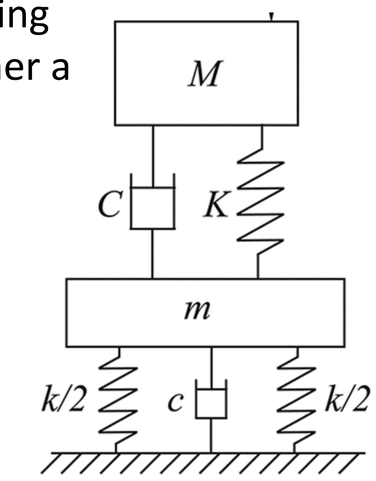

Langmuir-Blodgett preparation of DPPC films

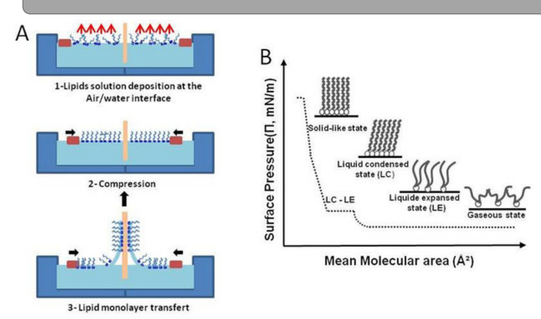

- Dipalmitolphosphatidylcholine (DPPC) used as an analog of lung tissues
- Langmuir-Blodgett technique used to deposit DPPC bilayers on clean Si
- Film morphology depends on surface pressure of dispersed surfactant molecules

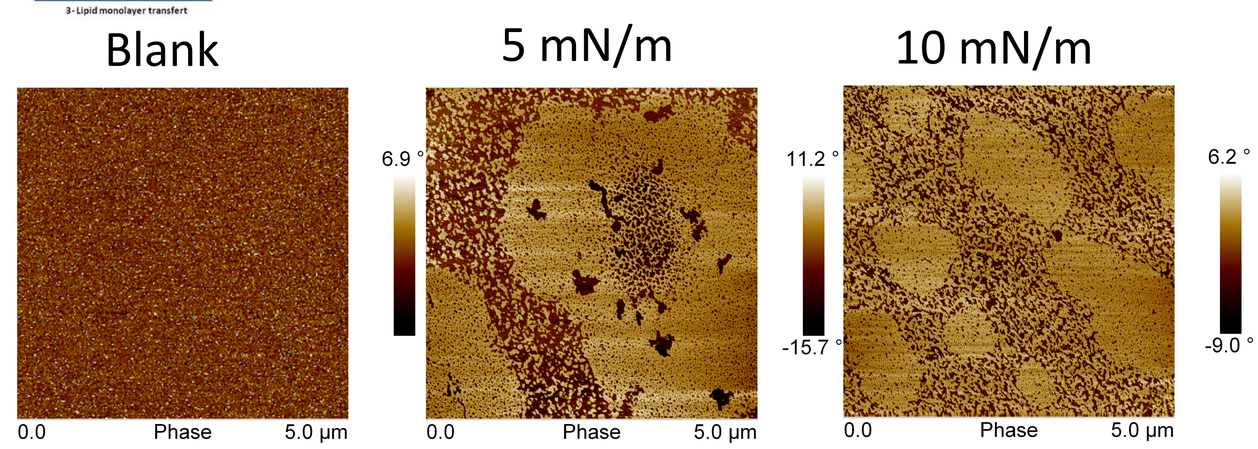

- AFM scans used to determine DPPC film morphology and uniformity
- XPS analysis used to verify coverage, chemical state of elements on surface
- Florescence microscopy, IR spectroscopy, or other techniques may provide alternative insight into the damage caused to films by the electrostatically charged dust grains

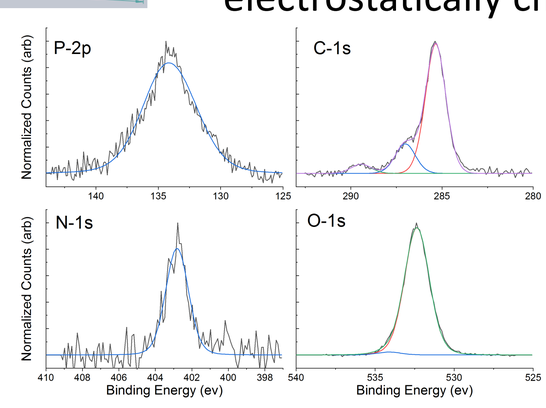

Acknowledgements

This work was supported by the NASA Solar System Exploration Research Virtual Institute (SSERVI) under cooperative agreement numbers NNA17BF68A (REVEALS), and by a NASA NPP grant, through SSERVI, to M. J. Schaible.