DEVELOPMENT OF NOVEL INSTRUMENTATION FOR IMPACT EXPERIMENTS

Alejandro Soto[1,4], Keith Nowicki[1,4], Akbar Whizin[1,4], Alex Parker[1,4], Dan Durda[1,4], Mark Cintala[2,4], Chris Cline II[3,4], and Kevin Walsh[1,4], [1]Southwest Research Institute, [2]NASA Johnson Space Center, [3]Jacobs Technologies Engineering Science, [4]Project ESPRESSO. (correspondence: asoto@boulder.swri.edu)

Research Summary:

We are developing the Grain Velocimetry and Tomography Analysis System (GraVeTAS), an instrument intended to measure the shape, and 3D velocity of ejecta simultaneously, both under laboratory conditions and eventually in situ on small bodies. We are currently incorporating the GraVeTAS instrumentation into small chambers in which we will conduct impact experiments, under vacuum, at 1 g and at lower gravity levels. The 1 g experiments will be conducted in our laboratory in Boulder, CO. The lower-gravity experiments will be conducted on reduced gravity flights provide by Canada's National Research Council Falcon 20 research aircraft.

GraVeTAS observation technique:

GraVeTAS employs techniques developed for velocimetry and nephelometry. Laser beams encoded with a fringe pattern are projected through a sampling volume. Associated with each beam is an array of photodiodes that are color-filtered to collect scattered light from only one laser wavelength. As a particle passes through the beam, the forward-scattered light is collected at multiple angles by the photodiodes. This forward scattered light maintains the fringe pattern of the original laser beam. A time-series of the scattered light signals is collected by the photodiodes from which the velocity, size, and shape of the particle is determined.

For more details on the GraVeTAS instrument, see the poster by **Nowicki et al.** in this 2020 NESF meeting.

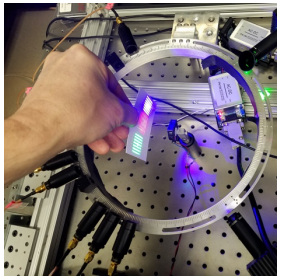

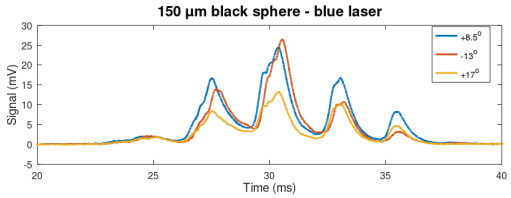

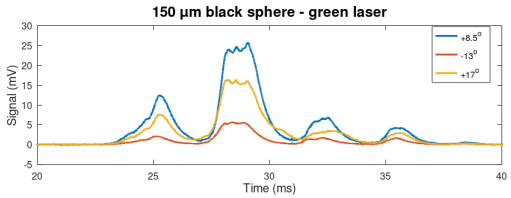

(above) Using the lab version of GraVeTAS, we show the orthogonal fringe patterns used to measure particle velocity. **(right)** Data from calibration experiments.

Impact Chambers:

We have a design for the impact chambers that will fly on the Falcon 20 research aircraft. The chamber incorporates the projectile launcher, the regolith tray, a tray cover, the GraVeTAS lasers, and the GraVeTAS detection system. Since each chamber allows for just one firing, we will build multiple chambers in order to conduct multiple experiments per flight. **(below left)** The the mechanical design for the complete chamber, the projectile launcher, the regolith tray, and the GraVeTAS instrumentation. **(below right)** The first build of the impact experiment chamber.

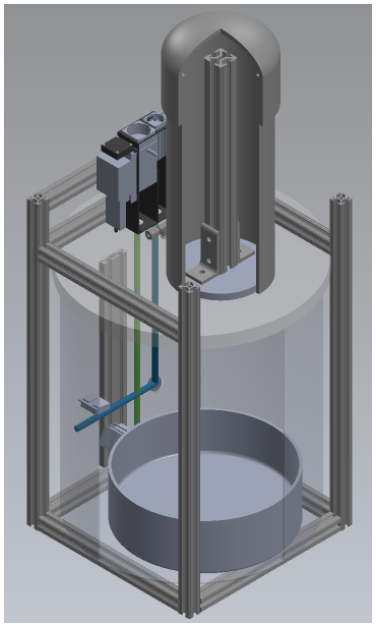

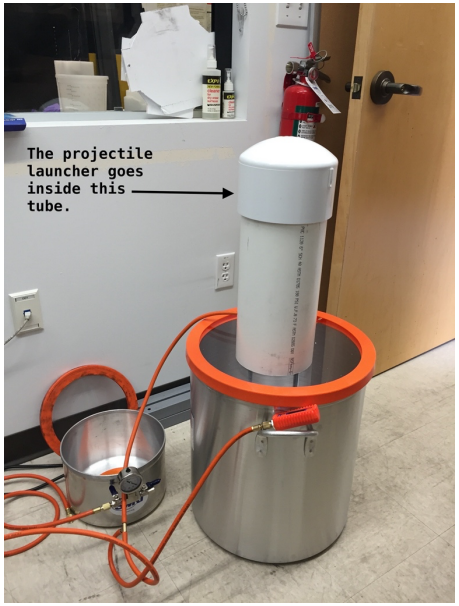

Project Status:

Although we were making good progress in building the impact chamber and GraVeTAS system, as of mid-March 2020 hardware development has nearly completely stopped due to the COVID19 pandemic and the subsequent work-stoppages. Our original first flights on the Falcon 20 research plane, originally scheduled for April 2020, are now indefinitely postponed. We are working to ramp up hardware and experiment development while still following all local social distancing and work rules (both municipal and corporate).