VISTA instrument for organics and volatiles characterization of asteroids regolith and cometary dust by using TGA technique

Ernesto Palomba [1], Fabrizio Dirri [1], Andrea Longobardo [1], David Biondi [1], Angelo Boccaccini [1], Anna Galiano [1], Emiliano Zampetti [2], Bortolino Saggin [3], Diego Scaccabarozzi [3],

(1) IAPS-INAF, Via Fosso del Cavaliere 100, 0133 Rome, Italy; (2) IIA-CNR, via Salaria km 29.300 Monterotondo, Rome, Italy; (3) Politecnico di Milano, Polo Territoriale di Lecco, Lecco, Italy;
Contacts E-mail : ernesto.palomba@inaf.it; fabrizio.dirri@inaf.it;

1 Introduction

VISTA (Volatile In-Situ Thermogravimetry Analyser) is a Quartz Crystal Microbalance-based device developed by Italian consortium and leaded by IAPS-INAF. The instrument core is a Piezoelectric Crystal Microbalance (PCM), equipped with built-in heater and built-in temperature sensor. The Proximity Electronics (PE) is included in the sensor heads. The instrument is able to use the ThermoGravimetric Analysis (TGA) for dust and regolith characterization, i.e. a technique used to monitor thermal processes involving volatile compounds, e.g. deposition/sublimation and absorption/ desorption [1,2].

VISTA was studied and selected for the Phase A for different Cosmic Vision Space Missions, such as the L2 JUICE [3], the M2 Marco Polo, the M3 Marco Polo-R [4] (where VISTA was selected for the scientific payload) and Mars [5]. An Engineering Model of VISTA has been developed during ITT ESA Project: i.e. CAM (Contamination Assessment Microbalance) (Fig.1) while a QCM breadboard has been developed during a second ITT ESA Project, i.e. CAMLAB (Contamination Assessment Microbalance for LABoratory) for laboratory applications, i.e. outgassing process monitoring in vacuum chambers at cryogenic temperatures.

Figure 1. CAM Engineering Model (TRL 6).

2 Thermogravimetry: basic principles

Thermogravimetric Analysis (TGA) is a widely used technique to investigate condensation/sublimation and absorption/desorption processes of volatile compounds in different environments [6,7,8]. The core of the thermogravimeter is a Piezoelectric Crystal Microbalance (PCM), whose oscillation frequency depends on the mass deposited on it: the higher the mass the lower the frequency [9]. The temperature of the device can be changed by means of an appropriate heater, so that desorption/absorption of different volatile compounds is allowed (Fig. 2). The abundance of the released/absorbed volatile compounds is given by the mass variation due to the desorption/adsorption processes, while its composition can be inferred by the desorption temperature.

The deposited mass (i.e. volatiles, dust, organics) can be characterized by the desorption rates (TGA analysis) and the enthalpy of sublimation (ΔHsub) by using the kinetic evaporation in vacuum for compounds, i.e. Langmuir relation (Langmuir, 1916).

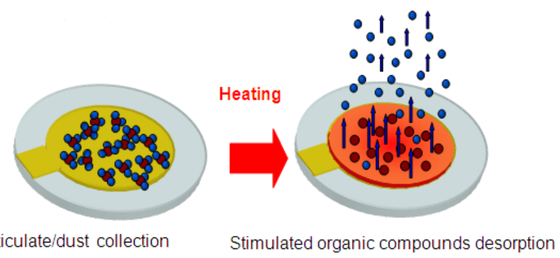

Figure 2. TGA Volatile desorption

3 Instrument concept and scientific goals

VISTA is an in-situ instrument based on TGA. It is based upon a lab-on-chip miniaturised sensor philosophy, since it has very small mass/volume and power requirements and needs a quite small amount of material for the analysis, i.e. less than 1 mg (Table 1).

VISTA is formed by 3 main subsystems: the Main Electronics Unit (MEU) and the two detection units (Sensor head 1 and Sensor Head 2). Sensor Head 1 (SH1) aims to monitor molecular contamination in space environment in support to sensitive components/instrumentations, e.g. optics, spectrometers etc. [10] while Sensor Head 2 (SH2) aims to characterize organic/volatile abundance in asteroid regolith (Fig. 3) and to measure possible cometary-like activity in the asteroid. Two different types of PCMs are considered to be used to act as sensitive elements: quartz crystal microbalances for SH1 and GaPO4 crystal microbalances for SH2. The main innovation introduced by VISTA concerns the special design of the Thermogravimeter, equipped with a built-in heater and a built-in thermistor, which can act as additional heater that reduces the total power required to perform thermal cycles.

SH1: consists of two sensitive elements, i.e. quartz crystals positioned in a sandwich-like configuration able to monitor contamination coming from outgassing processes in space in support to other instrumentation/hardware. SH1 should be set at low temperatures (by using a Peltier element or cold finger) to facilitate the attraction for outgassed molecules (mass accumulation phase) and then can be heated up to 350-400K in order to desorb the condensed molecules (TGA cycles, desorption phase). By using the desorption temperatures and desorbed mass, the retrieving of contaminant composition can be performed.

SH2: consists of a sensitive element, i.e. GaPO4 crystal and will perform μTGA measurements mainly at high temperatures. In particular, it should reach temperatures of 320-420 K to allow the physically adsorbed water to desorb, whereas at 470-570 K decomposition of organics should occur and at higher temperatures desorption of surface-bound water and decomposition of carbonates are expected [11, 12, 13, 14].

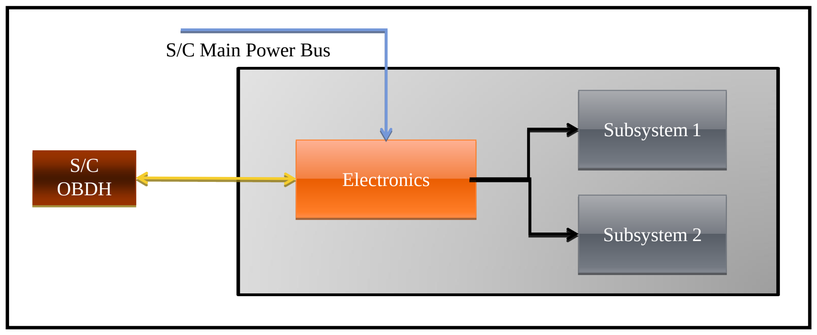

Figure 3. VISTA block diagram

Parameter	Sensor Head 1	Sensor Head 2
Type	QCM sensor (coupled crystals)	GaPO4 sensor (single crystal)
Weight	90 g	50 g
Resonant frequency	10 MHz	5.8 MHz
Volume	5 x 5 x 3.8 cm^3	3.5 x 3.5 x 2.5 cm^3
Power for TGA thermal cycles	Peak <1 W (DT~280 K) Mean = 0.5 W (DT~100 K)	Peak < 1 W (DT~400 K) Mean = 0.5 W (DT~100 K)
Power (passive mode)	0.3 W	0.6 W
Sensitivities	10 – 100 ppm 0.01 – 1 (ng cm^{-2} s^{-1})	10 – 100 ppm 0.01 – 1 (ng cm^{-2} s^{-1})
Operating T	70 – 400 K	250 – 700 K
Data Rate	66 bit/measurement	42 bit/measurement
TRL	6	4/5

Table 1. VISTA Instrumental Characteristics.

4 Laboratory tests

Laboratory tests of SH1 and SH2 were performed in vacuum at low temperature (193K and 10^{-7} mbar):

- to simulate different contamination processes (Fig. 4, *Left*): the contaminant (organic compound) was deposited with effusion method from 293K to 393K for a total deposition of 29.4 μg/cm². Successively, TGA cycles were applied from 200K up to 353K by means of built-in heaters to characterize the contaminant by using the enthalpy of sublimation, i.e. ΔH_{sub} = (135.3±1.3) kJ mol^{-1} which is in agreement within 5% with $\Delta H_{sub,\ literature}$ = (131±18) kJ mol^{-1} [15].
- to simulate sublimation processes of pure organics compounds (dicarboxylic acids) from 298K to 353K. By measuring two different deposition rates, *k1* and *k2*, at two different sample temperatures *T1* and *T2*, it has been possible to obtain the ΔH_{sub} by means of Van't Hoff relation [16]. Thus different deposition curves (Fig.4, *Right*) were obtained. The results are in good agreement with literature [2].

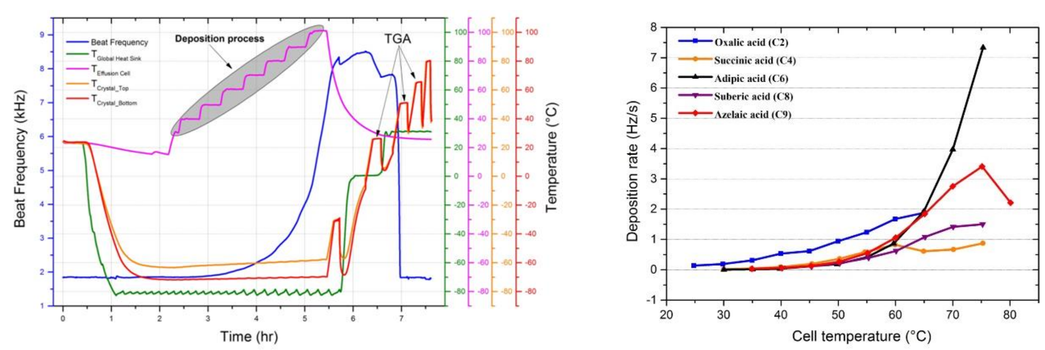

Figure 4. *Left:* SH1 contamination tests and TGA cycles. *Right:* SH1 sublimation processes in vacuum of organic compounds.

References

[1] Zinzi et al. 2011, *S&A A*, 172, 504-510, [2] Dirri et al, 2016, AMT, 8, 7127-7160; [3] G. Jones et al. 2017, 14th IPPW; [4] M.A. Barucci et al. 2012, EA, 333, 645-684; [5] E. Palomba et al. 2011, EPSC-DPS; [6] Serpaggi, F.; et al. (1999), J. Solid State Chem., 145, 580-586; [7] Stalport. F. ; et al. (2005), Geophys. Res. Lett., 32, L23205; [8] Wood, B. E. (1996), Proc. SPIE, 2864, 187-194; [9] Sauerbrey, G. Z. (1959), Zeitschrift fur Physik., 155, 206; [10] Dirri et al., 2019, S&A: Physical, 287, 48-75; [11] Grady, M. M. et al. (2002), Met. Planet. Sci., 37, 713-735; [12] Sephton, M.A.. (2002), Nat. Prod. Rep., 19, 292-311; [13] Halbout, J. et al (1986), Earth and Plant. Sci. Lett., 80, 1-1; [14] Bruckenthal, E.A. and Singer, R.B. (1987), LPSC abstracts, 18, 13; [15] M. Bilde et al., 2015, *Chem. Rev.* 2015, 115, 10, 4115–4156; [16] S.W. Benson 1968, 2nd ed., John Wiley & Sons, NY, 1017.