DEVELOPMENT OF NOVEL INSTRUMENTATION FOR IMPACT EXPERIMENTS. A. Soto[1,4], K. Nowicki[1,4], A.D. Whizin[1,4], A.H. Parker[1,4], D.D. Durda[1,4], M.J. Cintala[2,4], C.J. Cline II[3,4], and K.J. Walsh[1,4], [1]Southwest Research Institute, [2]NASA Johnson Space Center, [3]Jacobs Technologies Engineering Science, [4]Project ESPRESSO. (asoto@boulder.swri.edu)

Introduction: Over the lifetime of the surface of a small body, meteoroid and micrometeoroid impacts rework the surface [1]. Each impact generates impact ejecta with a range of sizes and energies that are diagnostic of the impact process and the surface conditions [2,3]. Simultaneous, *in situ* measurements by a future spacecraft could use the size and energy characteristics of ejecta to discern surface properties. However, previous laboratory studies and spaceflight instruments have generally measured only one aspect of the ejecta's characteristics, either size [2] or velocity [4]. Therefore, we are developing the Grain Velocimetry and Tomography Analysis System (GraVeTAS), an instrument intended to measure the shape, and 3D velocity of ejecta simultaneously, both under laboratory conditions and eventually *in situ* on small bodies.

GraVeTAS design. GraVeTAS employs techniques developed for velocimetry and nephelometry [5,6,7]. In a typical impact experiment in a chamber (see Figure 1), GraVeTAS is set up to characterize ejecta that pass through one or multiple, specific volumes of space. Laser beams encoded with a fringe pattern are projected through the sampling volume. Associated with each beam is an array of photodiodes that are color-filtered to collect scattered light from only one laser wavelength. As a particle passes through the beam, the forward-scattered light is collected at multiple angles by the photodiodes. This forward scattered light maintains the fringe pattern of the original laser beam. A time-series of the scattered light signals is collected by the photodiodes from which the velocity, size, and shape of the particle is determined.

The spacing of the peaks of the scattered fringe pattern directly measures the particle velocity. Using the optical fringe spacing, L_f, which is set by the optics, and the measured time between scattered fringe peaks, t, the particle velocity is calculated by $v=L_f/t$ (see reference [5] for more details). By using asymmetric fringes, we determine the direction of the particle movement.

We use computational tomography and Fourier-analysis techniques to derive the size and shape of the measured particle [Kak and Slaney, 2001; Goodman, 2005]. The photodetectors sample separate Fourier components of the scattered light, which encode spatial information about the scattering particle. Thus, by sampling the Fourier components we acquire sufficient information to derive the particle's dimensions.

Ongoing work. We are currently incorporating the GraVeTAS instrumentation into small chambers in which we will conduct impact experiments, under vacuum, at 1 g and at lower gravity levels. The 1 g experiments will be conducted in our laboratory in Boulder, CO. The lower-gravity experiments will be conducted on reduced gravity flights provide by Canada's National Research Council Falcon 20 research aircraft. We will present the current status of this project and outline the near-term laboratory and flight experiments that will be conducted with the GraVeTAS instrumentation.

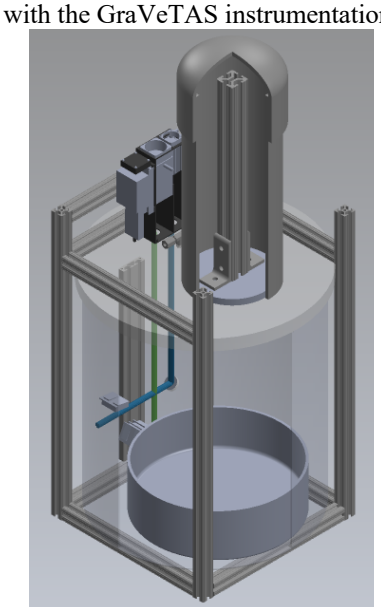

Figure 1. A drawing of the impact chamber configuration, used for both laboratory and reduced gravity flights. The actual chamber walls are transparent to allow the interior to be seen. The green and blue lines represent the laser beams that are part of GraVeTAS. The laser box is at the top.

References:

[1] McKay D.S. *et al.* (1991) in Lunar Sourcebook, Heiken G.H. *et al.*, eds. Cambridge Univ. Press/LPI, 736pp. [2] Gault D.E. *et al.* (1963) NASA TN D-1767. [3] Oberbeck V.R. and Morrison R.H. (1976) *PLSC 7*, 2983. [4] Cintala et al. (1999) *MAPS* **34**, 605. [5] Durst, F. *et al.* (1976). NASA STI/Recon Technical Report A, 76:47019. [6] Boutier, A. and Most, J.-M. (2013). In *Laser Velocimetry in Fluid Mechanics*, pages 33–138. [7] Nakagawa, M. *et al.* (2016). Aerosol Science and Technology, 50(4):392–404. [8] Kak, A. C. and Slaney, M. (2001). *Principles of computerized tomographic imaging*. [9] Goodman, J. W. (2005). *Introduction to Fourier optics.*