Dynamic Radioisotope Power Systems (DRPS) Status and Path to Flight

National Aeronautics and Space Administration

S. Oriti | Salvatore.M.Oriti@nasa.gov | 216.433.2066
NASA Glenn Research Center, Cleveland, OH 44135

ABSTRACT

NASA and DOE are pursuing a novel Dynamic Radioisotope Power System (DRPS) that has mission-enabling potential. Improvements over currently available power systems include: higher conversion efficiency, less waste heat, low degradation, and higher end-of-mission power. Degradation-free life of dynamic heat-engine-based conversion has been demonstrated in the laboratory on the time scales required by even the longest Planetary Science missions

DYNAMIC POWER CONVERSION ADVANTAGES

- Conversion efficiency (thermal-to-electric) up to 40% demonstrated
- Non-contacting bearings and seals (enables long-life continuous operation)
- Zero degradation via elimination of wear mechanisms
- Macroscopic engineering challenges (high-temp materials, high-cycle fatigue)
- Long-life, maintenance-free capability demonstrated in laboratory:

Example electrically-heated DRPS test station

Test Article	Years of Operation
TDC #13	14.0
TDC #14	12.1
TDC #15	13.6
TDC #16	13.6
ASC-0 #3	10.3
ASC-E3 #4	5.1
ASC-E3 #6	3.6
ASC-E3 #9	3.5
ASC-E3 #8	3.1
ASC-L	6.1

Cumulative runtimes on various Stirling convertors at NASA GRC

DYNAMIC RPS PERFORMANCE REQUIREMENTS

- Derived from a Surrogate Mission Team
- Encompasses wide range of potential Planetary Science Missions

Category	Goal
Power Output	100 to 500 W_e
Design Life	17 years
Efficiency	>20% at T_{cold}>100°C
Specific Power	2 W_e/kg
Fault Tolerance	Single fault tolerant
Degradation	<1.3% per year
Random Vibe	Launch qual (10.4 g_{rms} , 20-2000 Hz)
Static Accel	20g for 1 minute, 5g for 5 days
Radiation	100 krad
Mission Compatibility	Deep space, Lunar, Titan, Europa, Enceladus

RECENT DYNAMIC CONVERSION TECHNOLOGY DEVELOPMENTS

- Three ongoing contracts are developing prototype dynamic convertors
- Delivery expected later this year
- Prototypes will undergo independent validation and verification at NASA GRC
- Ongoing work included DRPS designs, based on their individual conversion technologies:

Flexure Isotope Stirling Convertor

6x

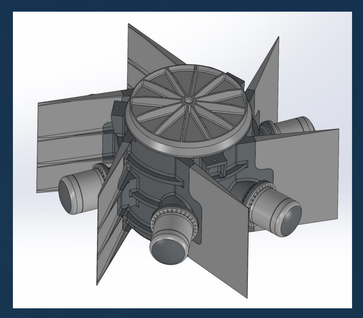

American Superconductor, Inc. with Teledyne Energy Systems	
Power	223 W_e
Efficiency	22%
Mass	66 kg
# of GPHS	4

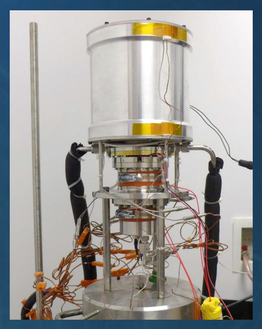

Sunpower Robust Stirling Convertor

6x

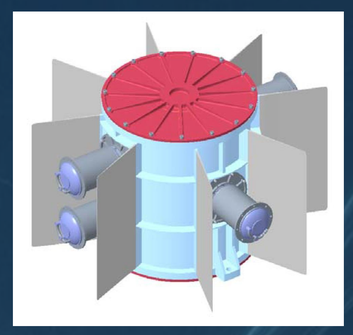

Sunpower, Inc. with Aerojet Rocketdyne	
Power	238 W_e
Efficiency	24%
Mass	68 kg
# of GPHS	4

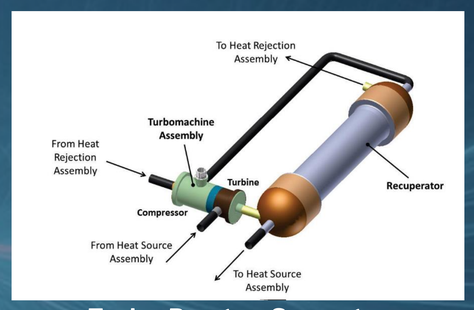

Turbo-Brayton Convertor

2x

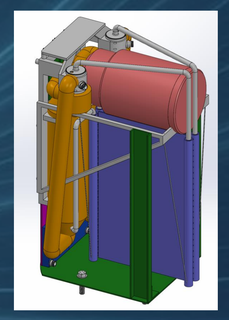

Creare, LLC. with Aerojet Rocketdyne	
Power	337 W_e
Efficiency	21 %
Mass	133 kg
# of GPHS	6

NOTIONAL PATH TO FLIGHT

- Initial steps for a potential qualification-unit DRPS contract have been taken, which could begin in 2021, and result in flight-qualification hardware in 2025

Nov 2020	Decision to Begin Qual-Unit Dev
Jul 2021	Award System Integration Contract
Dec 2025	Qual Unit Delivered to DOE